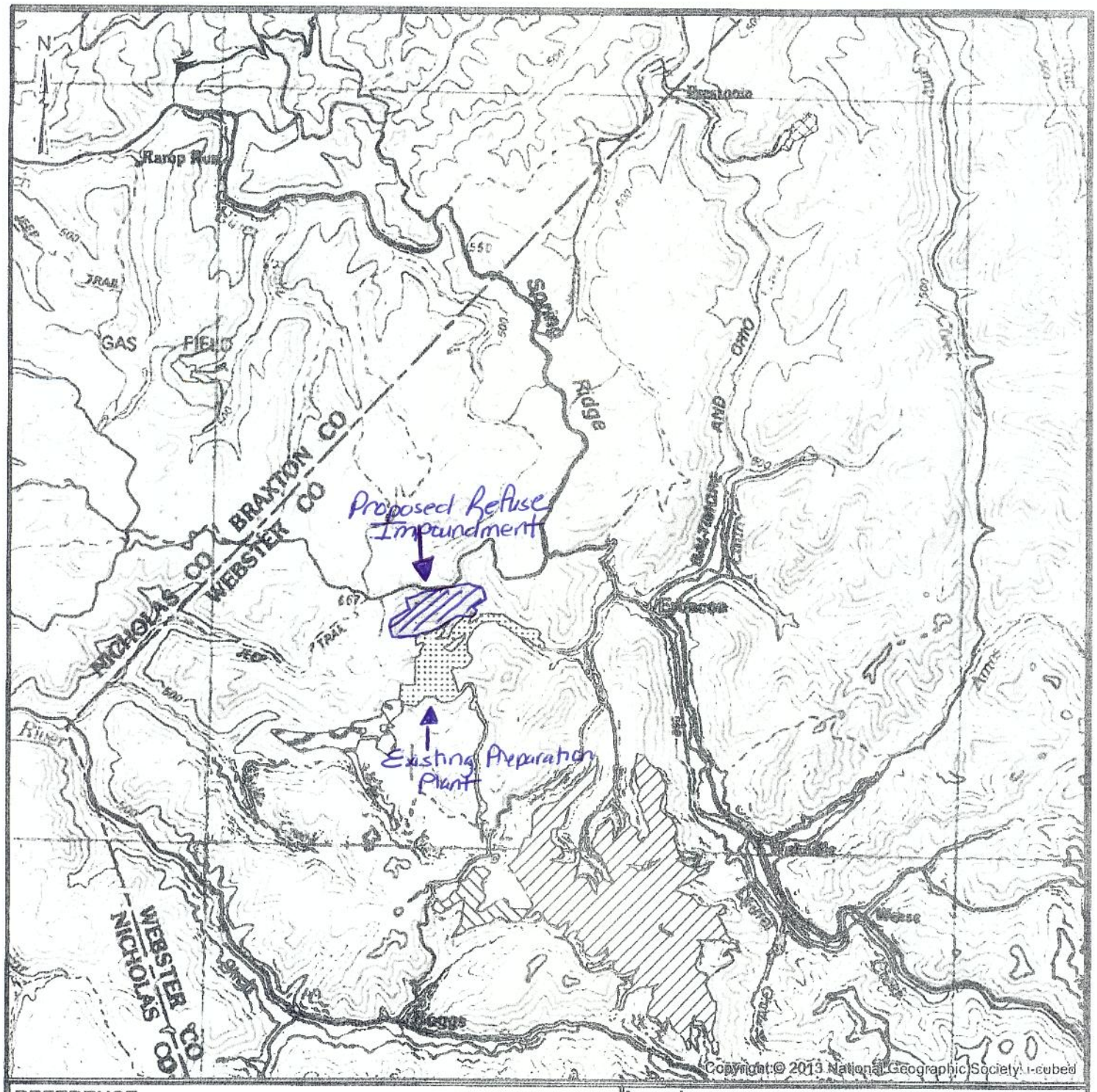

REFERENCE:

ArcGIS map service, USA topo maps (USGS topographic maps)
http://goto.arcgisonline.com/maps/usa_topo_maps

SCALE

0 1,500 3,000 6,000 9,000 12,000 Feet

Legend

PROJECT BOUNDARY

ACTIVE MINING PERMITS

- S200912-HOOVER'S LAND
- U200611-JACKSON BRIDGE EXTENSION
- U201208-JACKSON'S BRIDGE
- P061200-ERBACON PREPARATION PLANT
- S102680-SURFACE 7
- S201002-SEVEN PINES
- U062000-MINE 4
- U200609-SUMTER

Alliance Consulting, Inc.
Engineers · Constructors
124 PHILPOTT LANE
BEAVER, WV 25813
(304) 255-0491

ACTIVE MINING IN THE OUTLET LAUREL CREEK WATERSHED

STUMP HOLLOW PROSPECTIVE INTEREST AREA
WEBSTER COUNTY, WEST VIRGINIA

PREPARED FOR
BROOKS RUN MINING COMPANY, LLC
25 LITTLE BIRCH ROAD, SUTTON, WV 26601

DRAWN BY	HD	09/15/14
CHECKED BY	BH	09/15/14
APPROVED BY		
DRAWING NUMBER		FIGURE NUMBER
B07-239-A42		

NOTES:

1) REFER TO THE GUIDELINE TECHNICAL SPECIFICATIONS (APPENDIX A) FOR CONSTRUCTION REQUIREMENTS.
2) FOR SECTIONS A–A AND B–B, REFER TO DRAWING NO. B07–234–E9.
3) REFER TO DRAWING NOS. B07–239–E11 AND B07–239–E12 FOR DECANT INSTALLATION DETAILS.
4) THE FILTER DRAINAGE DIAPHRAGM OUTLET DRAIN SHALL BE INSTALLED PARALLEL TO THE DECANT PIPE. THE DRAIN MAY BE INSTALLED ON THE EXCAVATED DECANT BENCH OR WITHIN THE EMBANKMENT MATERIAL. REFER TO DRAWING NO. B07–239–E11 FOR DETAILS OF THE OUTLET DRAIN.
5) THE PIEZOMETERS SHALL BE INSTALLED UPON COMPLETION OF THE EMBANKMENT CONSTRUCTION. IF FINE COAL REFUSE DISPOSAL COMMENCES ONCE THE EMBANKMENT IS COMPLETED TO ELEVATION 1835, THE PIEZOMETERS SHALL BE INSTALLED WHEN THE EMBANKMENT REACHES THE ELEVATION OF THE BENCH WHERE THE PIEZOMETER IS LOCATED. REFER TO DRAWING NO. B07–239–E9 FOR PIEZOMETER TIP ELEVATIONS. AS NOTED ON DRAWING NO. B07–239–E10, THE TOP OF THE SENSING ZONE FOR PIEZOMETER P–1 SHALL BE SET AT ELEVATION 1740.
6) A CUTOFF TRENCH (KEYWAY) SHALL BE EXCAVATED ALONG THE VALLEY BOTTOM AND UP THE HILLSIDE ABUTMENTS TO ELEVATION 1900. THE KEYWAY SHALL BE EXCAVATED TO COMPETENT BEDROCK AND SHALL HAVE A BOTTOM WIDTH OF 50 FEET. MATERIAL EXCAVATED FROM THE KEYWAY SHALL BE STOCKPILED FOR LATER USE AS SOIL COVER FOR THE COMPLETED EMBANKMENT SLOPES.
7) TO VERIFY THAT NO MINING EXISTS IN THE NORTH ABUTMENT THAT COULD AFFECT THE INTEGRITY OF THE EMBANKMENT, TWO VERIFICATION BOREHOLES SHALL BE DRILLED UPON COMPLETION OF THE EMBANKMENT CONSTRUCTION:
   A) THE FIRST HOLE SHALL BE DRILLED VERTICALLY FROM EL. 1920± TO EL. 1830±
   B) THE SECOND HOLE SHALL BE AN ANGLE HOLE DRILLED AT AN ANGLE OF 30° OR LESS (FROM THE VERTICAL) AND EXTEND THROUGH THE LOWER KITTANNING COAL SEAM

   BOTH HOLES SHALL BE DRILLED AS CLOSE TO THE ORIGINAL GROUND ABUTMENT AS POSSIBLE. SHOULD ANY MINE VOIDS BE ENCOUNTERED, A REMEDIAL PLAN SHALL BE DEVELOPED AND SUBMITTED TO THE REGULATORY AUTHORITIES FOR APPROVAL.

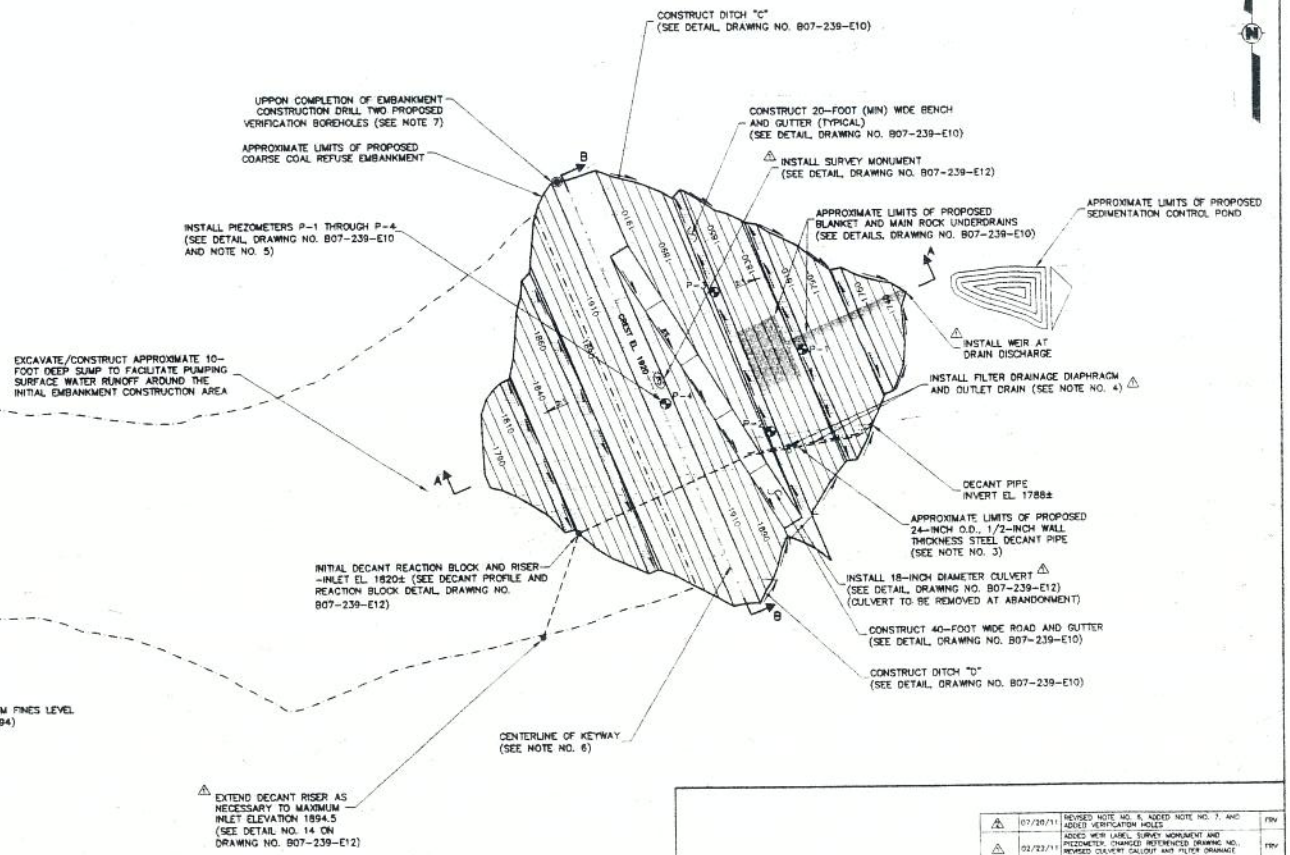

"I, THE UNDERSIGNED, HEREBY CERTIFY THAT THIS MAP IS CORRECT AND SHOWS TO THE BEST OF MY KNOWLEDGE AND BELIEF ALL THE INFORMATION REQUIRED BY THE SURFACE MINING LAWS OF THIS STATE."

_____ W.P.E. NO. _____

ACKNOWLEDGED BEFORE ME A NOTARY PUBLIC _____

THIS ____ DAY OF _____ MY COMMISSION EXPIRES _____

"THE TERM "CERTIFY" AS USED HEREIN IS DEFINED AS FOLLOWS: "AN ENGINEER'S CERTIFICATION OF CONFORMS IS A DECLARATION OF PROFESSIONAL JUDGEMENT. IT DOES NOT CONSTITUTE A WARRANTY OR GUARANTEE, EITHER EXPRESSED OR IMPLIED, NOR DOES IT RELIEVE ANY OTHER PARTY OF THEIR RESPONSIBILITY TO ABIDE BY CONTRACT DOCUMENTS, APPLICABLE CODES, STANDARDS, REGULATIONS AND ORDINANCES"

SCALE
100 0 100 200 FEET

REV.	DATE	DESCRIPTION	P.M.
3	07/20/11	REVISED NOTE NO. 6, ADDED NOTE NO. 7, AND ADDED VERIFICATION HOLES	FRV
2	02/22/11	ADDED WEIR LABEL, SURVEY MONUMENT AND PIEZOMETER, CHANGED REFERENCED DRAWING NO., REVISED CULVERT CALLOUT AND FILTER DRAINAGE DIAPHRAGM LOCATION	FRV

Alliance Consulting, Inc.
Engineers • Constructors
BECKLEY, WV (304) 255-2500 | SUMMERSVILLE, WV (304) 872-1300 | CANONSBURG, PA (724) 746-1616

PLAN – PROPOSED EMBANKMENT
STUMP HOLLOW IMPOUNDMENT
GLADE DISTRICT, WEBSTER COUNTY, WEST VIRGINIA
Prepared For
BROOKS RUN MINING COMPANY, LLC.
SUTTON, BRAXTON COUNTY, WEST VIRGINIA

CAD BY RAL 07/20/09 | PROJECT NO. B07–239–1374 | FIGURE NO. 4
CHECKED BY FRV 09/30/09 | DRAWING NO. B07–239–E8
APPROVED BY FRV 09/30/09

REFERENCE:
PHOTOGRAMMETRIC DIGITAL MAPPING OF MISSOURI CREEK OF LAUREL CREEK OF ELK RIVER WATERSHED PREPARED BY L. ROBERT KIMBALL & ASSOCIATES, INC. EBENSBURG, PA. DATE OF PHOTOGRAPHY – APRIL 12, 2003. SCALE OF PHOTOGRAPH – 1"=800'

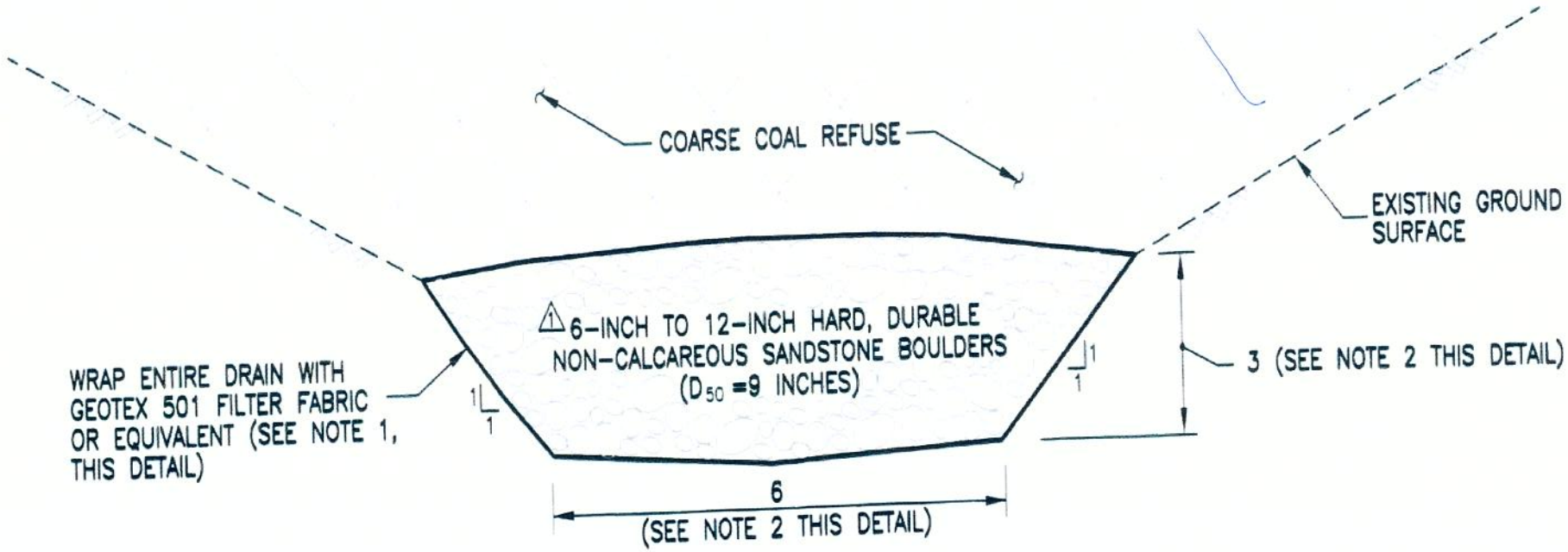

NOTE:

1. WHERE FILTER FABRIC IS LAPPED, 24-INCH (MIN) OVERLAP IS REQUIRED.
2. DRAIN CONFIGURATION CAN BE MODIFIED PROVIDED A MINIMUM CROSS-SECTIONAL AREA OF 25 SQ.FT. AND A MINIMUM DRAIN HEIGHT OF 3 FEET ARE MAINTAINED.
3. LARGE VOIDS ENCOUNTERED AT THE TOP OF THE UNDERDRAIN SHOULD BE FILLED WITH SMALLER STONES TO LIMIT TEARING OF THE FILTER FABRIC.

DETAIL 5
MAIN ROCK UNDERDRAIN

N.T.S.

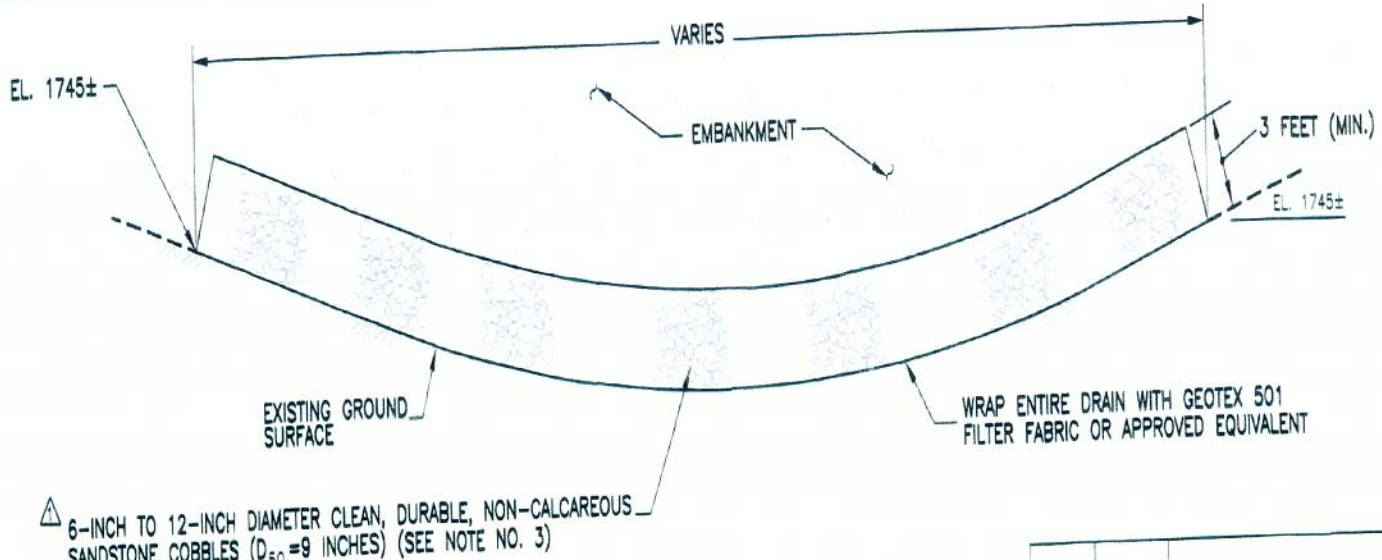

DETAIL 6
BLANKET DRAIN

N.T.S.

NOTES:

1. OVERLAP FILTER FABRIC 24 INCHES (MIN).
2. REFER TO DRAWING NO. B07-239-E8 FOR PLAN LOCATION OF BLANKET DRAIN.
3. LARGER ROCK COBBLES AND BOULDERS ARE ACCEPTABLE PROVIDED THE MINIMUM DIMENSION OF THE DRAIN IS 3 TIMES LARGER THAN THE MAXIMUM ROCK SIZE. LARGE VOIDS ENCOUNTERED AT THE TOP OF THE UNDERDRAIN SHALL BE FILLED WITH SMALLER STONES TO MINIMIZE TEARING OF THE FILTER FABRIC.
4. A 4-FOOT THICK LAYER OF LOOSE COARSE COAL REFUSE MATERIAL SHALL BE PLACED IMMEDIATELY ABOVE THE BLANKET DRAIN.

"I, THE UNDERSIGNED, HEREBY CERTIFY* THAT THIS MAP IS CORRECT AND SHOWS TO THE BEST OF MY KNOWLEDGE AND BELIEF ALL THE INFORMATION REQUIRED BY CHAPTER 1513 OF THE REVISED CODE AND RULES ADOPTED THEREUNDER".

_____ R.P.E. NO. _____

ACKNOWLEDGED BEFORE ME A NOTARY PUBLIC, _____

THIS ___ DAY OF _____, ____ MY COMMISSION EXPIRES _____

*THE TERM "CERTIFY" AS USED HEREIN IS DEFINED AS FOLLOWS: "AN ENGINEER'S CERTIFICATION OF CONDITIONS IS A DECLARATION OF PROFESSIONAL JUDGMENT. IT DOES NOT CONSTITUTE A WARRANTY OR GUARANTEE, EITHER EXPRESSED OR IMPLIED, NOR DOES IT RELIEVE ANY OTHER PARTY OF THEIR RESPONSIBILITY TO ABIDE BY CONTRACT DOCUMENTS, APPLICABLE CODES, STANDARDS, REGULATIONS AND ORDINANCES".

REV.	DATE	DESCRIPTION	P.M.
△1	06/16/11	REVISED DETAILS 1, 2, 3 AND NOTES ON DETAILS 5, 5A AND 6	

Alliance Consulting, Inc.
Engineers · Constructors · Scientists
BECKLEY, WV (304) 255-0491 | SUMMERSVILLE, WV (304) 863-2360 | CANONSBURG, PA (724) 745-3630

DETAILS (SHEET 1 OF 3)
STUMP HOLLOW IMPOUNDMENT
GLADE DISTRICT, WEBSTER COUNTY, WEST VIRGINIA
Prepared For
BROOKS RUN MINING COMPANY, LLC.
SUTTON, BRAXTON COUNTY, WEST VIRGINIA

CAD BY	DSM 06/29/09	PROJECT NO. B07-239-1374	FIGURE NO. 6
CHECKED BY	FRV 09/30/09		
APPROVED BY	FRV 09/30/09	DRAWING NO. B07-239-E10	

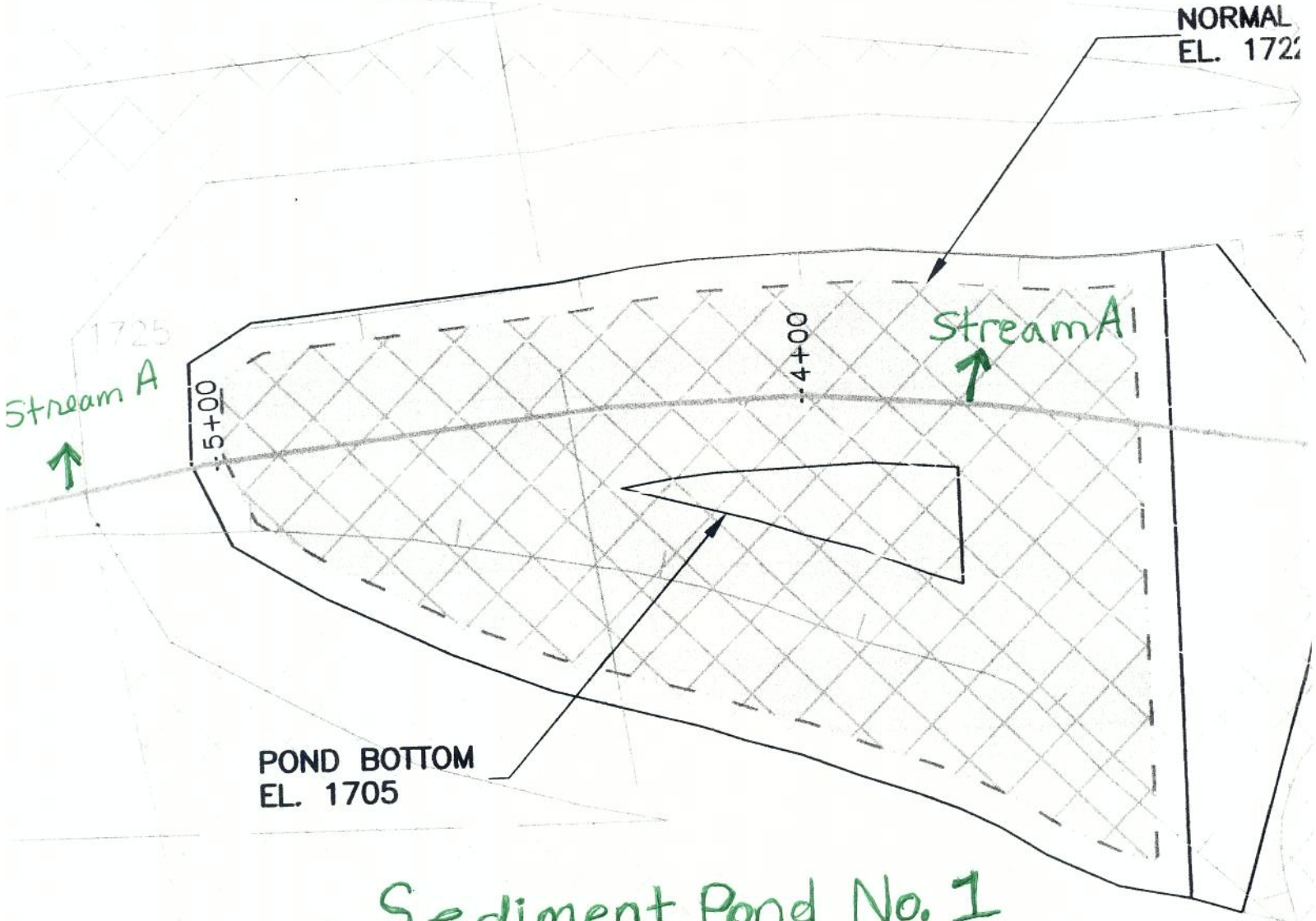

Sediment Pond No. 1

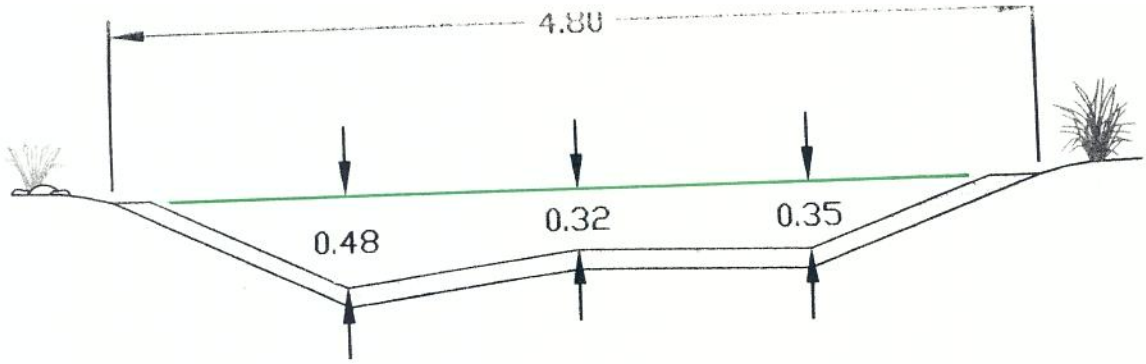

CHANNEL A

STATION 0+00

SCALE

30 0 30 60 FEET

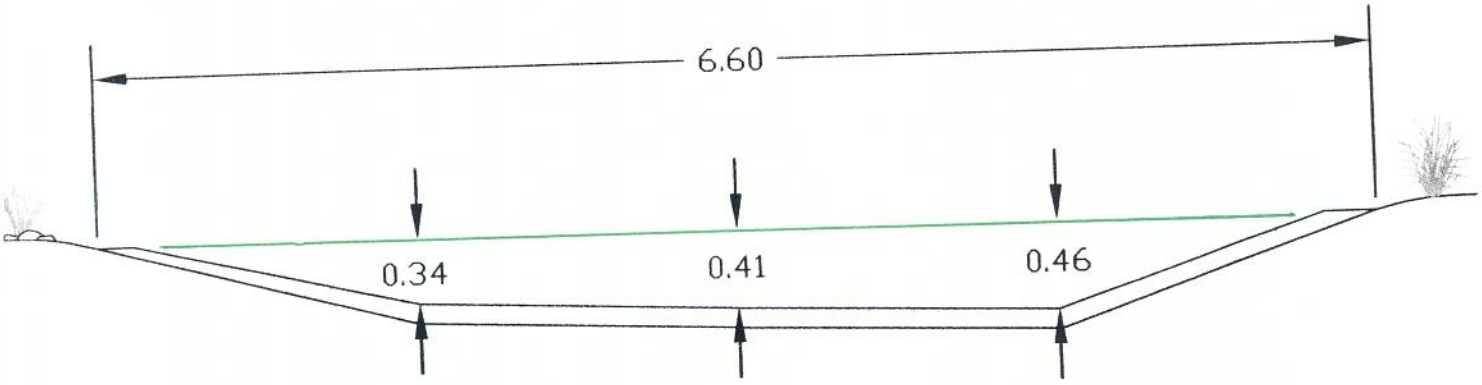

CHANNEL A

STATION 5+20

SCALE

30 0 30 60 FEET

Stream A Section