The following document is not readable via Optical Character Recognition. For more information or if you require the document to be read aloud please call: 304-399-5353

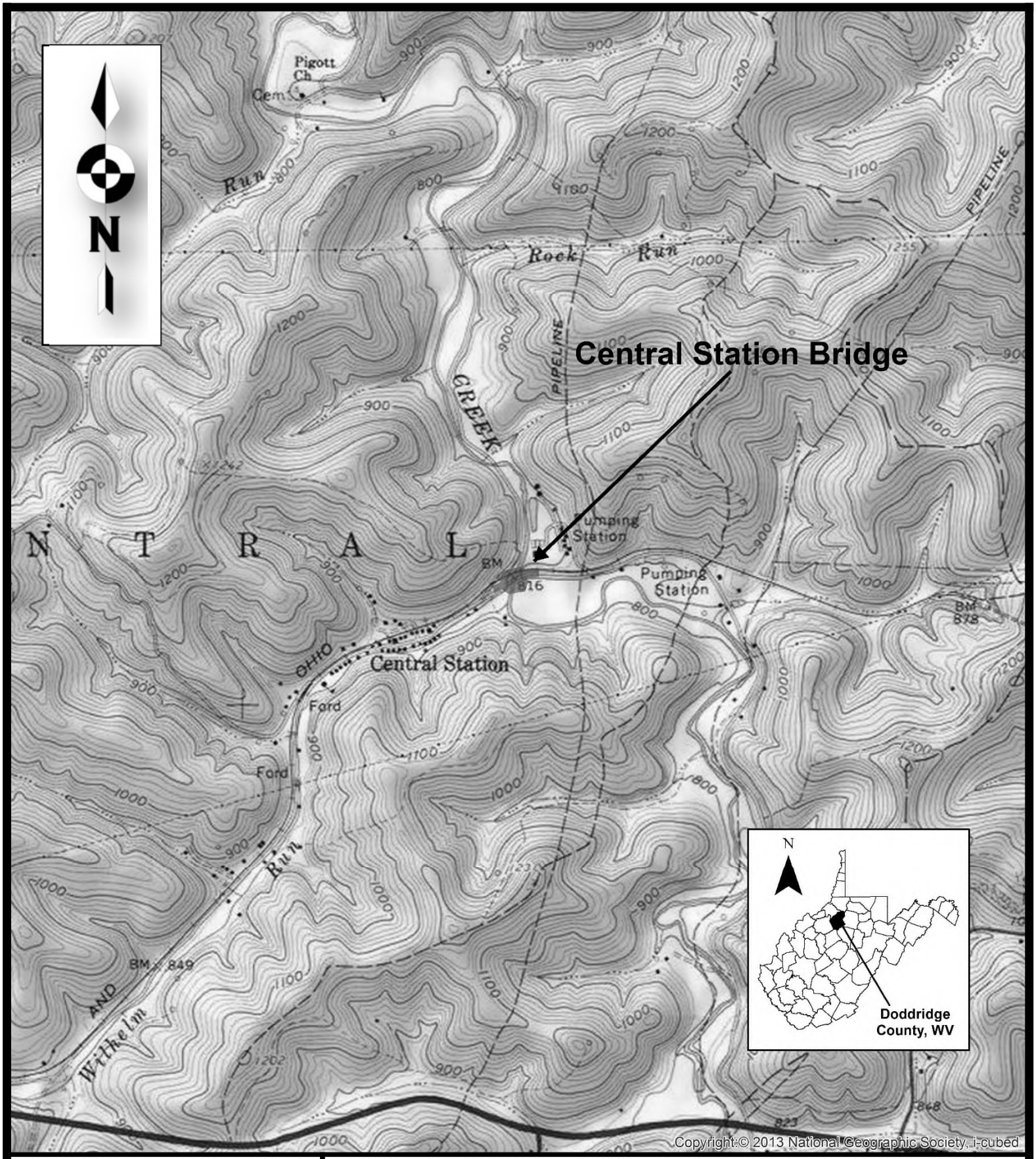

FIGURE 1. Project Location Map

Central Station Bridge

Latitude 39.295906 °N
Longitude 80.821324 °W

A portion of the West Union 7 ½' Quadrangle

Scale: 1 = 24000

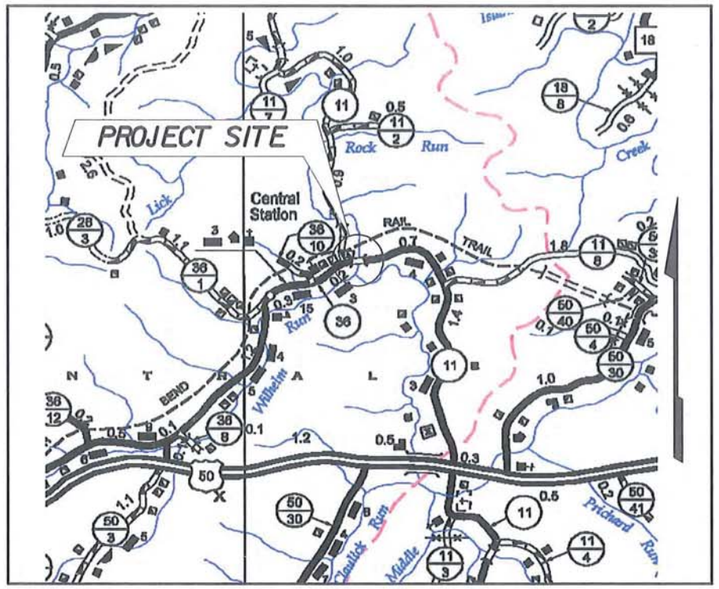

Antero Resources

ANTERO RESOURCES CORPORATION

CENTRAL STATION BRIDGE OVER ARNOLD CREEK

DODDRIDGE COUNTY ROUTE 11

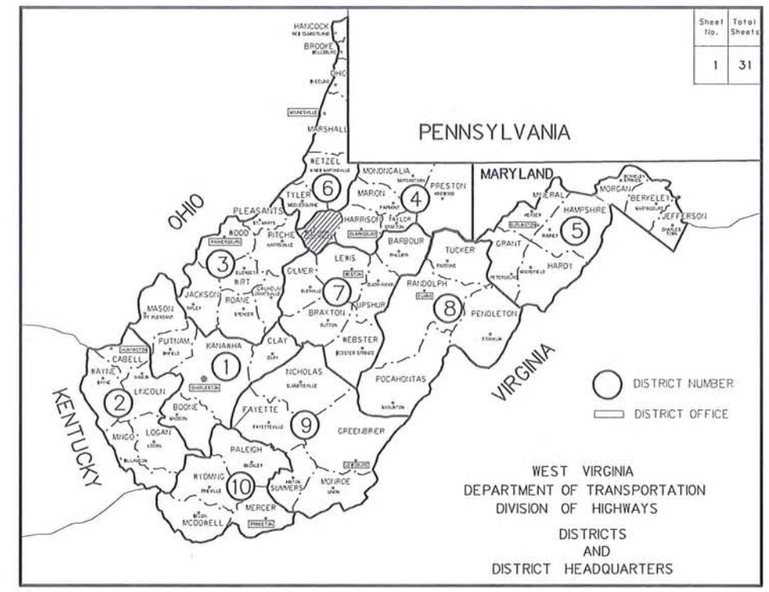

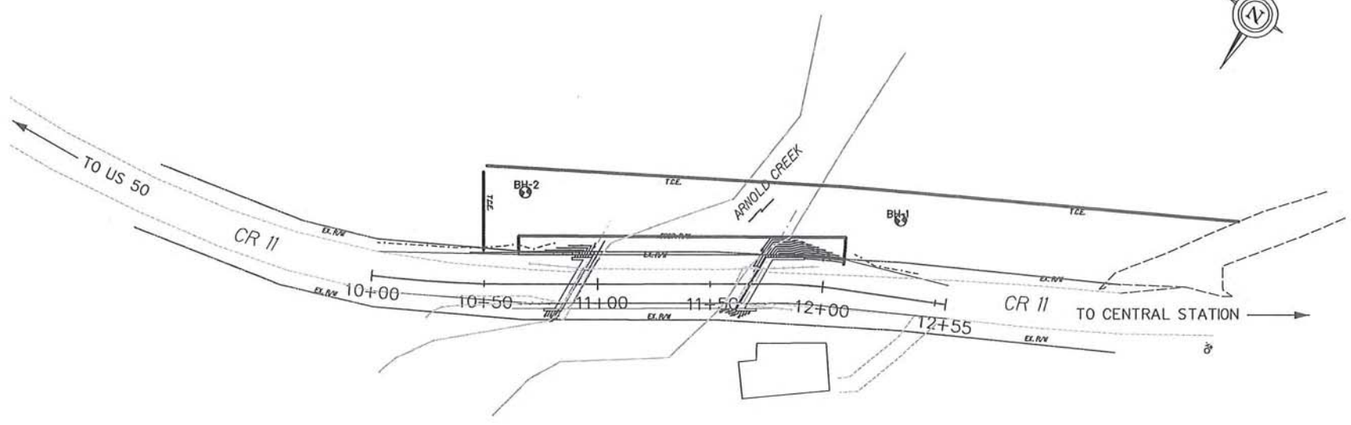

INDEX TO SHEETS

NO.	DESCRIPTION
1	TITLE SHEET
2	QUANTITIES
3	GENERAL NOTES
4-5	TTCP PLAN SHEETS
6	GENERAL PLAN AND ELEVATION
7	REGRADING PLAN
8-11	ABUTMENT 1 DETAILS AND REINFORCING
12-15	ABUTMENT 2 DETAILS AND REINFORCING
16	BEAM LAYOUT, TYPICAL SECTION
17-23	BEAM DETAILS AND STANDARDS
24-26	OREGON THRIE BEAM GUARDRAIL DETAILS
27	CORE BORINGS
28-31	CROSS SECTIONS 10+00 TO 12+54.76

WILLIAM G. WHITE
REGISTERED
13340
STATE OF WEST VIRGINIA
PROFESSIONAL ENGINEER
7-8-15

WB White Brothers Consulting, LLC

BILCO CONSTRUCTION

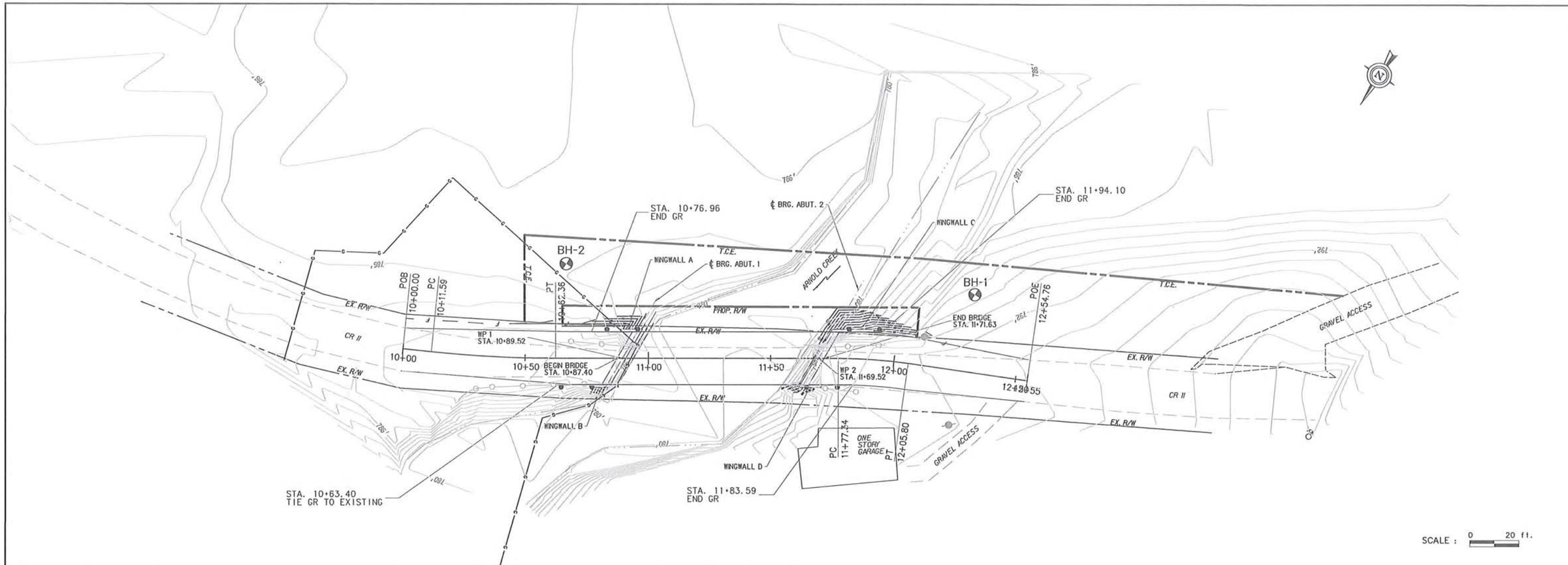

HYDRAULIC DATA			
DRAINAGE AREA =	20.46 SQ. MILES		
NORMAL POOL =	779.76		
OHW EL =	782.56		
STORM EVENT	FLOW (CFS)	VELOCITY (FT/S)	WSE
10% (10-YEAR)	2410	5.13	787.39
4% (25-YEAR)	3119	5.02	788.50
2% (50-YEAR)	3687	4.63	789.11
1% (100-YEAR)	4220	4.27	789.65
0.2% (500-YEAR)	5699	4.29	790.88

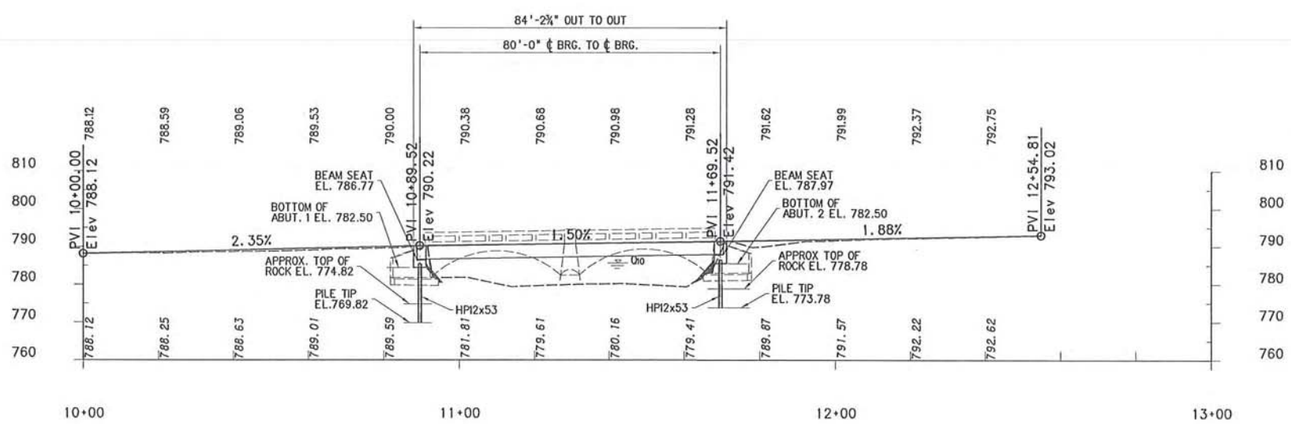

NOTE:

1. HP12x53 PILES TO BE SOCKETED A MINIMUM OF 5'-0" INTO ROCK.
2. ROCK SOCKET FOR PILES SHALL HAVE A MINIMUM DIAMETER OF 24".
3. PILE SOCKET BACKFILL SHALL BE EITHER CLASS B CONCRETE OR GROUT.

SCALES
5 ft. 0
0 20 ft.

REVISION NUMBER	SHEET NUMBER	REVISION	DATE	BY	REVISION NUMBER	SHEET NUMBER	REVISION	DATE	BY

White Brothers Consulting, LLC

BILCO CONSTRUCTION

PLAN SHEET			
DRAWN	CHECKED	APPROVED	DATE
JCB	TTW	WDW	5-28-15

SCALE
NTS

Antero

CENTRAL STATION BRIDGE
OVER ARNOLD CREEK
CR 11
ANTERO RESOURCES
DODDRIDGE COUNTY

GENERAL PLAN AND ELEVATION

SHEET 6 OF 31

SUBMISSION: 1 SUBMISSION: 2 SUBMISSION: 3 SUBMISSION: 4 SUBMISSION: 5

PH: MM 1111-MMM-00

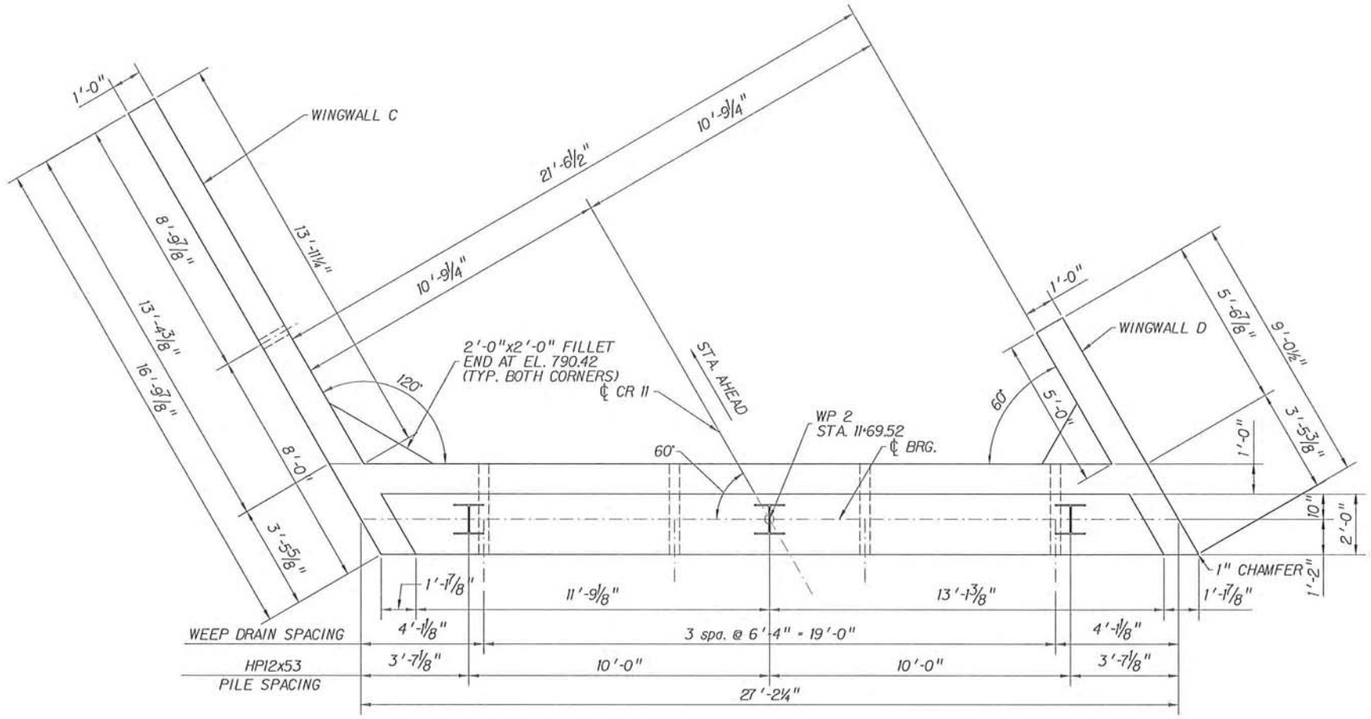

PLAN

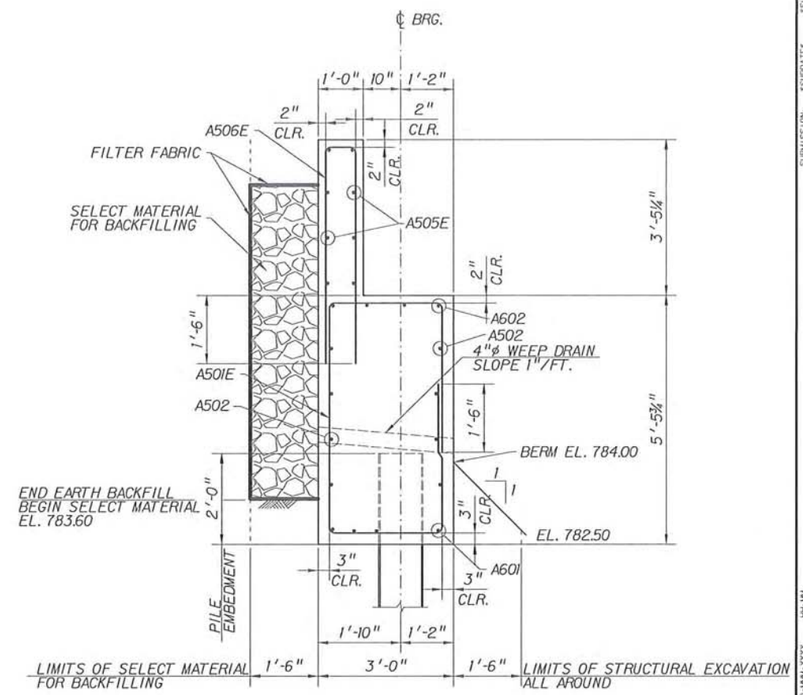

SECTION

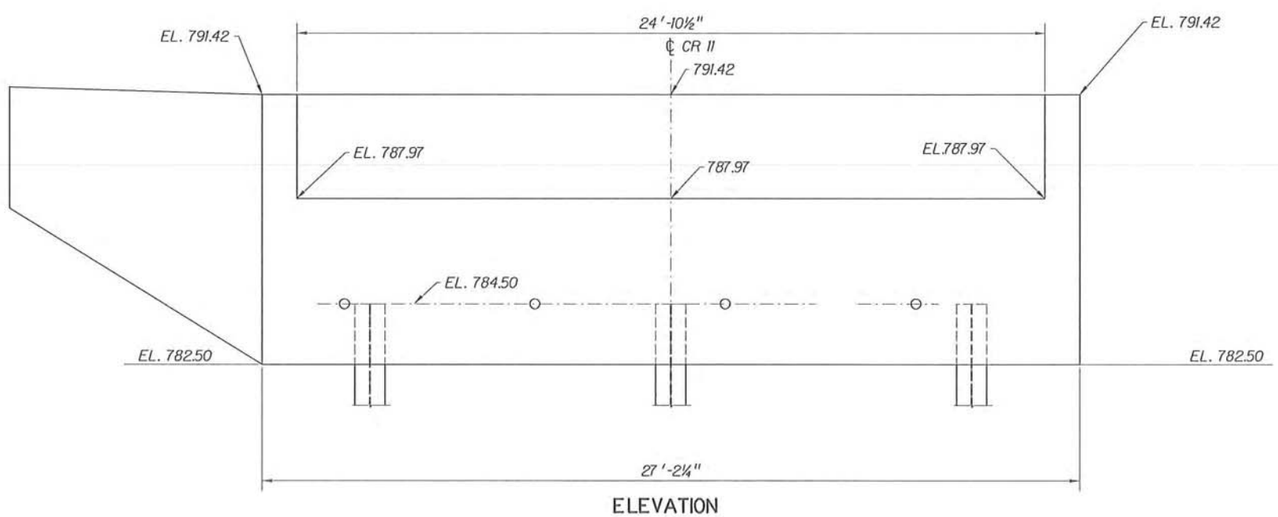

ELEVATION

NOTES:

1. SEAT ELEVATIONS ARE GIVEN AT CENTERLINE OF BEARING.
2. ROADWAY ELEVATIONS GIVEN AT THE FRONT FACE OF BACKWALL.
3. ALL WEEP DRAINS ARE 4" ϕ NON-RUSTING MATERIAL. (PLACE REINFORCING STEEL TO MISS WEEP DRAINS). STONES ARE TO BE STACKED AROUND WEEP DRAINS TO PREVENT LOSS OF MATERIAL.
4. CONTRACTOR SHALL LINE THE EXCAVATED SURFACE AS INDICATED IN THE PLANS BEFORE PLACING SEL:ECT MATERIAL FOR BACKFILLING.
5. FOR WINGWALL C & D DETAILS. SEE SHEET 14.
6. FOR REINFORCING STEEL. SEE SHEET 15.

REVISION NUMBER	SHEET NUMBER	REVISION	DATE	BY	REVISION NUMBER	SHEET NUMBER	REVISION	DATE	BY

White Brothers Consulting, LLC

BILCO CONSTRUCTION

PLAN SHEET			
DRAWN	CHECKED	APPROVED	DATE
JCB	TTW	WDW	5-28-15

SCALE: NTS

Antero

CENTRAL STATION BRIDGE
OVER ARNOLD CREEK
CR 11
ANTERO RESOURCES
DODDRIDGE COUNTY

ABUTMENT 2
PLAN AND ELEVATION

SHEET 12 OF 31

SSSSSSSSSSF:\LENNAE\SSSSSSSSS

DD-MMM-YYYY HH:MM

SUBMISSION SUBMISSION SUBMISSION

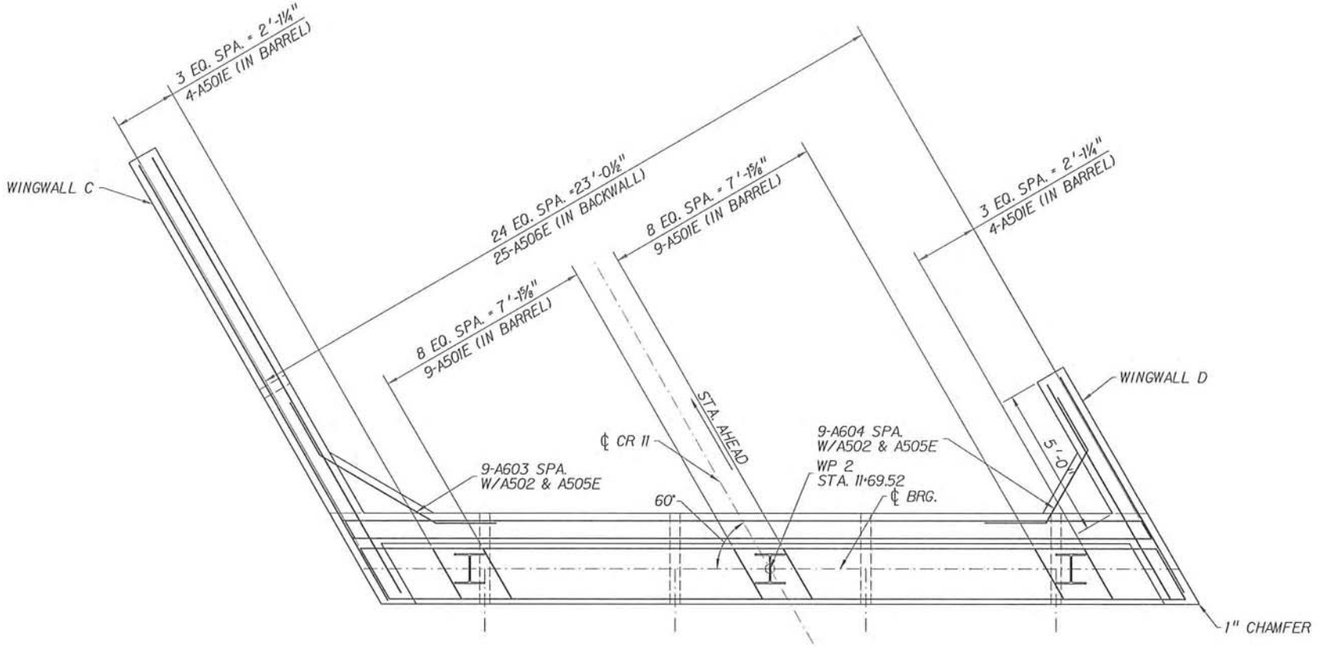

PLAN

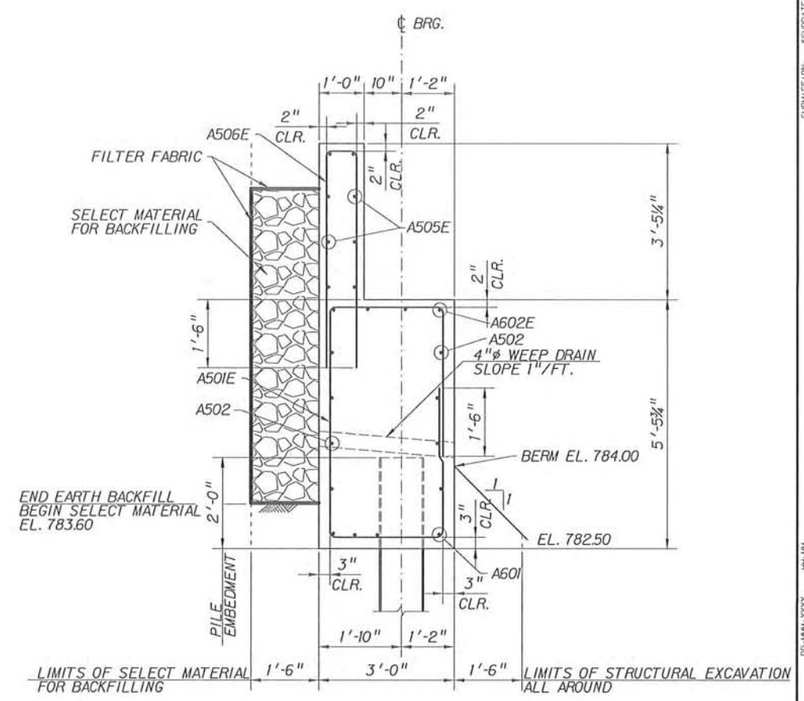

SECTION

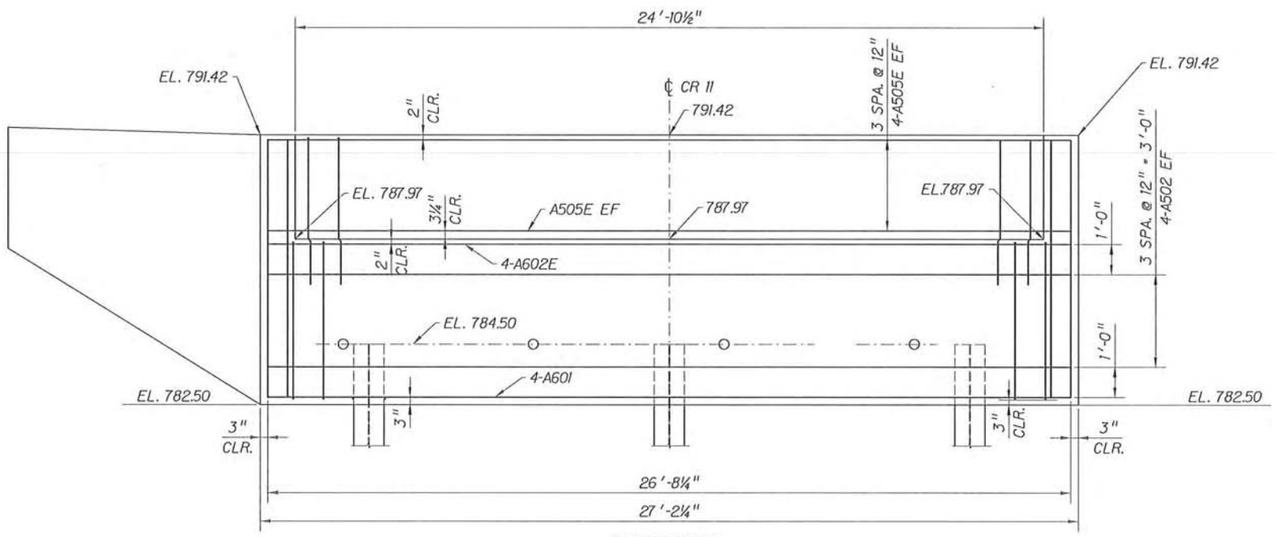

ELEVATION

NOTES:

1. SEAT ELEVATIONS ARE GIVEN AT CENTERLINE OF BEARING.
2. ROADWAY ELEVATIONS GIVEN AT THE FRONT FACE OF BACKWALL.
3. ALL WEEP DRAINS ARE 4" ø NON-RUSTING MATERIAL. (PLACE REINFORCING STEEL TO MISS WEEP DRAINS). STONES ARE TO BE STACKED AROUND WEEP DRAINS TO PREVENT LOSS OF MATERIAL.
4. CONTRACTOR SHALL LINE THE EXCAVATED SURFACE AS INDICATED IN THE PLANS BEFORE PLACING SELECT MATERIAL FOR BACKFILLING.
5. FOR WINGWALL C & D DETAILS, SEE SHEET 14.

REVISION NUMBER	SHEET NUMBER	REVISION	DATE	BY	REVISION NUMBER	SHEET NUMBER	REVISION	DATE	BY

White Brothers Consulting, LLC

BILCO CONSTRUCTION

PLAN SHEET			
DRAWN	CHECKED	APPROVED	DATE
JCB	TTW	WGW	5-28-15

SCALE: NTS

Antero

CENTRAL STATION BRIDGE
OVER ARNOLD CREEK
CR 11
ANTERO RESOURCES
DODDRIDGE COUNTY

ABUTMENT 2
REINFORCEMENT

SHEET 13 OF 31

SSSSSSSSSSF:\FILENAME SSSSSSSSS

DD-MMM-YYYY HH:MM

SUBMISSIONS SUBMISSIONS SUBMISSIONS

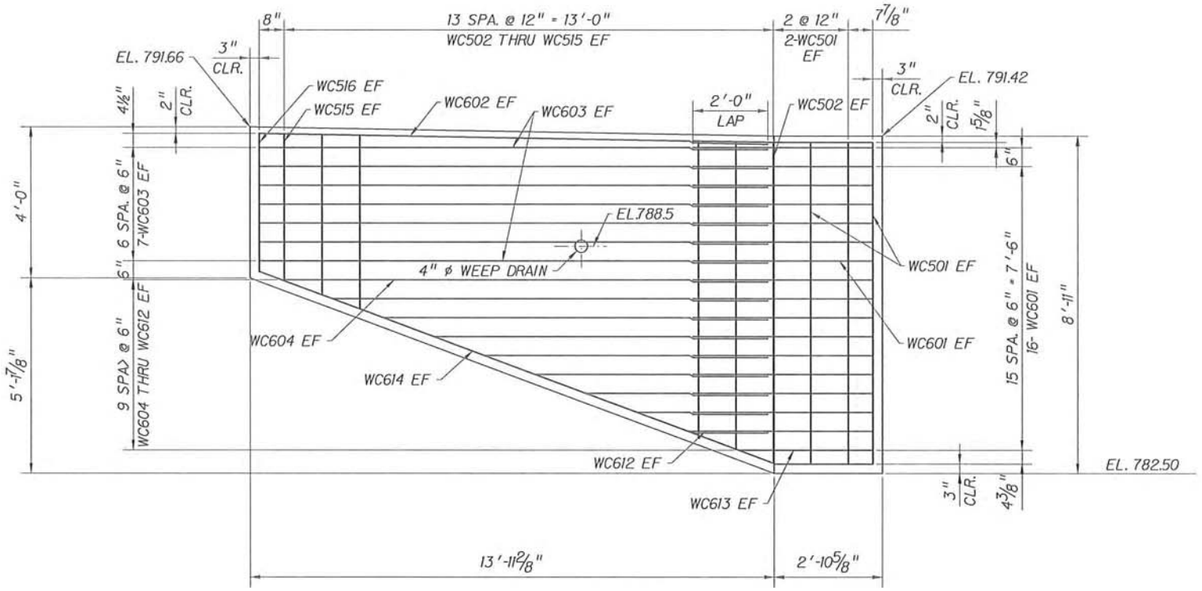

ELEVATION WINGWALL C

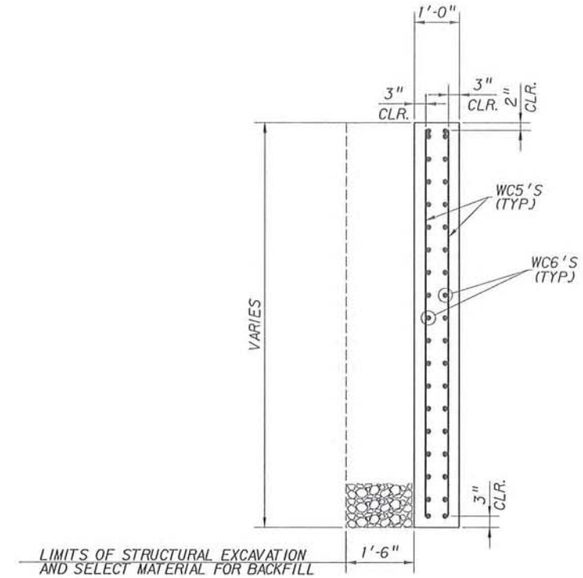

SECTION WINGWALL C

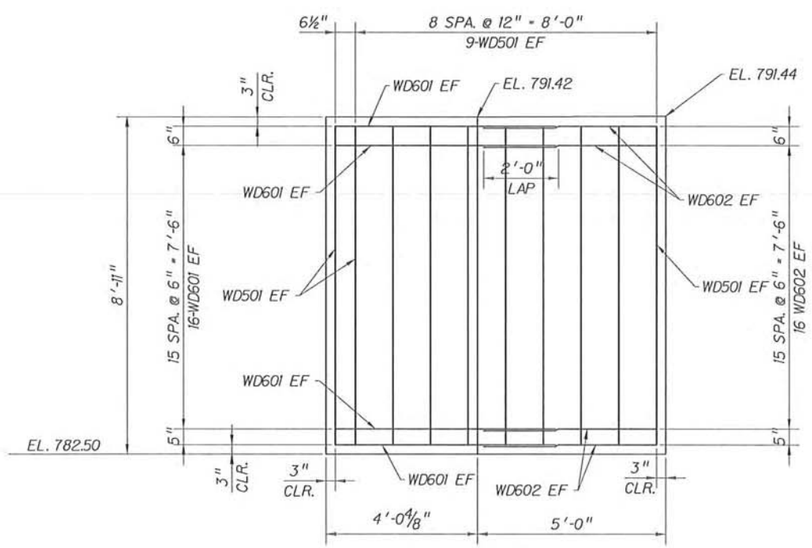

ELEVATION WINGWALL D

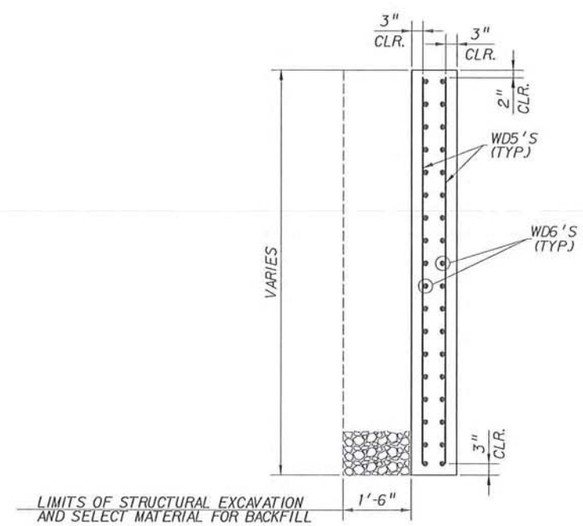

SECTION WINGWALL D

REVISION NUMBER	SHEET NUMBER	REVISION	DATE	BY	REVISION NUMBER	SHEET NUMBER	REVISION	DATE	BY

White Brothers Consulting, LLC

BILOG CONSTRUCTION

PLAN SHEET			
DRAWN	CHECKED	APPROVED	DATE
JCB	TTW	WDW	5-28-15

SCALE
NTS

Antero

CENTRAL STATION BRIDGE
OVER ARNOLD CREEK
CR 11
ANTERO RESOURCES
DODDRIDGE COUNTY

WINGWALLS C AND D
DETAILS

SHEET 14 OF 31

SUBMISSION: 5/15/2015 SUBMITTED: 5/15/2015 PRINTED: 11-14-2017 DD-MMM-YYYY
$$$$$$$$$$$$ FILENAME: $$$$$$$$$$