Public Notice

U S Army Corps of Engineers
Huntington District

In reply refer to Public Notice No. **200500186**

Issuance Date: March 8, 2005

Stream: **Ohio River, rivermile 319.4 to 319.7**

Closing Date: April 7, 2005

Please address all comments and inquiries to:
U.S. Army Corps of Engineers, Huntington District
ATTN: CELRH-OR-F Public Notice No. (*reference above*)
502 Eighth Street
Huntington, West Virginia 25701-2070
Phone: (304) 399-5710

PUBLIC NOTICE: The purpose of this public notice is to inform you of a proposal for work in which you might be interested. It is also to solicit your comments and information to better enable us to make a reasonable decision on factors affecting the public interest. We hope you will participate in this process.

REGULATORY PROGRAM: Since its early history, the U.S. Army Corps of Engineers (Corps) has played an important role in the development of the nation's water resources. Originally, this involved construction of harbor fortifications and coastal defenses. Later duties included the improvement of waterways to provide avenues of commerce. An important part of our mission today is the protection of the nation's waterways through the administration of the Corps Regulatory Program.

SECTION 10: The Corps is directed by Congress under Section 10 of the Rivers and Harbors Act of 1899 (33 USC 403) to regulate all work or structures in or affecting the course, condition or capacity of navigable waters of the United States (U.S.). The intent of this law is to protect the navigable capacity of waters important to interstate commerce.

SECTION 404: The Corps is directed by Congress under Section 404 of the Clean Water Act (33 USC 1344) to regulate the discharge of dredged and fill material into all waters of the United States, including wetlands. The intent of the law is to protect the nation's waters from the indiscriminate discharge of material capable of causing pollution and to restore and maintain their chemical, physical and biological integrity.

TO WHOM IT MAY CONCERN: The following application has been submitted for a Department of the Army Permit under the provisions of Section 10 of the Rivers and Harbors Act.

APPLICANT: Superior Marine Ways, Inc.
Po Box 514
South Point, Ohio 45680

LOCATION: The proposed project is located along the right descending bank of the Ohio River, rivermile 319.4 to 319.7 near South Point, Lawrence County, Ohio.

DESCRIPTION OF THE PROPOSED WORK: The applicant proposes to construct and operate a 36-barge capacity fleeting facility and perform topside cleaning of barges. The proposal would include the installation of four mooring structures and four concrete deadmen structures. Barges would be moored six wide and six barges long within a 210' X 1615' fleeting area. There would be no anticipated dredging associated with the project. The mooring structures would b e situated approximately 25' to 50' from the normal pool shoreline. The fleet would extend 210 feet from the riverward face of the mooring structures.

HISTORIC AND CULTURAL RESOURCES: The National Register of Historic Places (NRHP) has been consulted and it has been determined there are no properties currently listed on the register that are in the area affected by the project. A copy of this public notice will be sent to the SHPO for their review. Additional comments concerning archeological sensitivity of a project area should be based upon collected data.

ENDANGERED/THREATENED SPECIES REVIEW: The project is located within the known or historic range of the following threatened or endangered species:

Indiana Bat
Pink Mucket Pearly Mussel
Running Buffalo Clover

The Huntington District has consulted the most recently available information and based on proposed avoidance and minimization measures, the project is not likely to adversely affect the Pink Musket Pearly Mussel and will have no effect on the Indiana Hat or Running Buffalo Clover or designated habitat for these Federally listed species. This public notice serves as a request to the U.S. Fish and Wildlife Service for any additional information they may have on whether any listed or proposed to be listed endangered or threatened species may be present in the area which would be affected by the activity, pursuant to Section 7(c) of the Endangered Species Act of 1972 (as amended).

PUBLIC INTEREST REVIEW AND COMMENT: Any person who has an interest that may be adversely affected by the issuance of a permit may request a public hearing. The request must be submitted in writing to the District Engineer on or before the expiration date of this notice and must clearly set forth the interest which may be adversely affected and the manner in which the interest may be adversely affected by the activity. This application will be reviewed in accordance with 33 CFR 320-331, the Regulatory Program of the U. S. Army Corps of Engineers (USACE), and other pertinent laws, regulations, and executive orders. Our evaluation will also follow the guidelines published by the U. S. Environmental Protection Agency pursuant to Section 404(b)(1) of the CWA. Interested parties are invited to state any objections they may have to the proposed work. The decision whether to issue a permit will be based on an evaluation of the probable impact including cumulative impacts of the proposed activity on the public interest. That decision will reflect the national concern for both protection and utilization of important resources. The benefit that reasonably may be expected to accrue from the proposal must be balanced against its reasonably foreseeable detriments. All factors that may be relevant to the proposal will be considered including the cumulative effects thereof; of those are conservation, economics, aesthetics, general environmental concerns, wetlands, historic properties, fish and wildlife values, flood hazards, floodplain values, land use, navigation,

shoreline erosion and accretion, recreation, water supply and conservation, water quality, energy needs, safety, food and fiber production, mineral needs, considerations of property ownership and, in general, the needs and welfare of the people. Written statements on these factors received in this office on or before the expiration date of this public notice will become a part of the record and will be considered in the final determination. A permit will be granted unless its issuance is found to be contrary to the public interest.

SOLICITATION OF COMMENTS: The Corps of Engineers is soliciting comments from the public; Federal, state, and local agencies and officials; Indian Tribes; and other interested parties in order to consider and evaluate the impacts of this proposed activity. For accuracy and completeness of the administrative record, all data in support of or in opposition to the proposed work should be submitted in writing setting forth sufficient detail to furnish a clear understanding of the reasons for support or opposition. Any comments received will be considered by the Corps of Engineers to determine whether to issue, modify, condition or deny a permit for this proposal. To make this decision, comments are used to assess impacts on endangered species, historic properties, water quality, general environmental effects, and the other public interest factors listed above. Comments are used in the preparation of an Environmental Assessment and/or an Environmental Impact Statement pursuant to the National Environmental Policy Act. Comments are also used to determine the need for a public hearing and to determine the overall public interest of the proposed activity.

CLOSE OF COMMENT PERIOD: All comments pertaining to this Public Notice must reach this office on or before the close of the comment period listed on page one of this Public Notice. If no comments are received by that date, it will be considered that there are no objections. Comments and requests for additional information should be submitted to Ms. Tammy R. Fudge, Regulatory Project Manager, South Regulatory Section, CELRH-OR-FS, U. S. Army Corps of Engineers Huntington District, 502 Eighth Street, Huntington, West Virginia 25701-2070. Please note names and addresses of those who submit comments in response to this public notice may be made publicly available. Thank you for your interest in our nation's water resources. If you have any questions concerning this public notice, please call Ms. Tammy R. Fudge of the South Regulatory Section at 304-399-5710.

Ginger Mullins, Chief
Regulatory Branch

(OH) (KY)

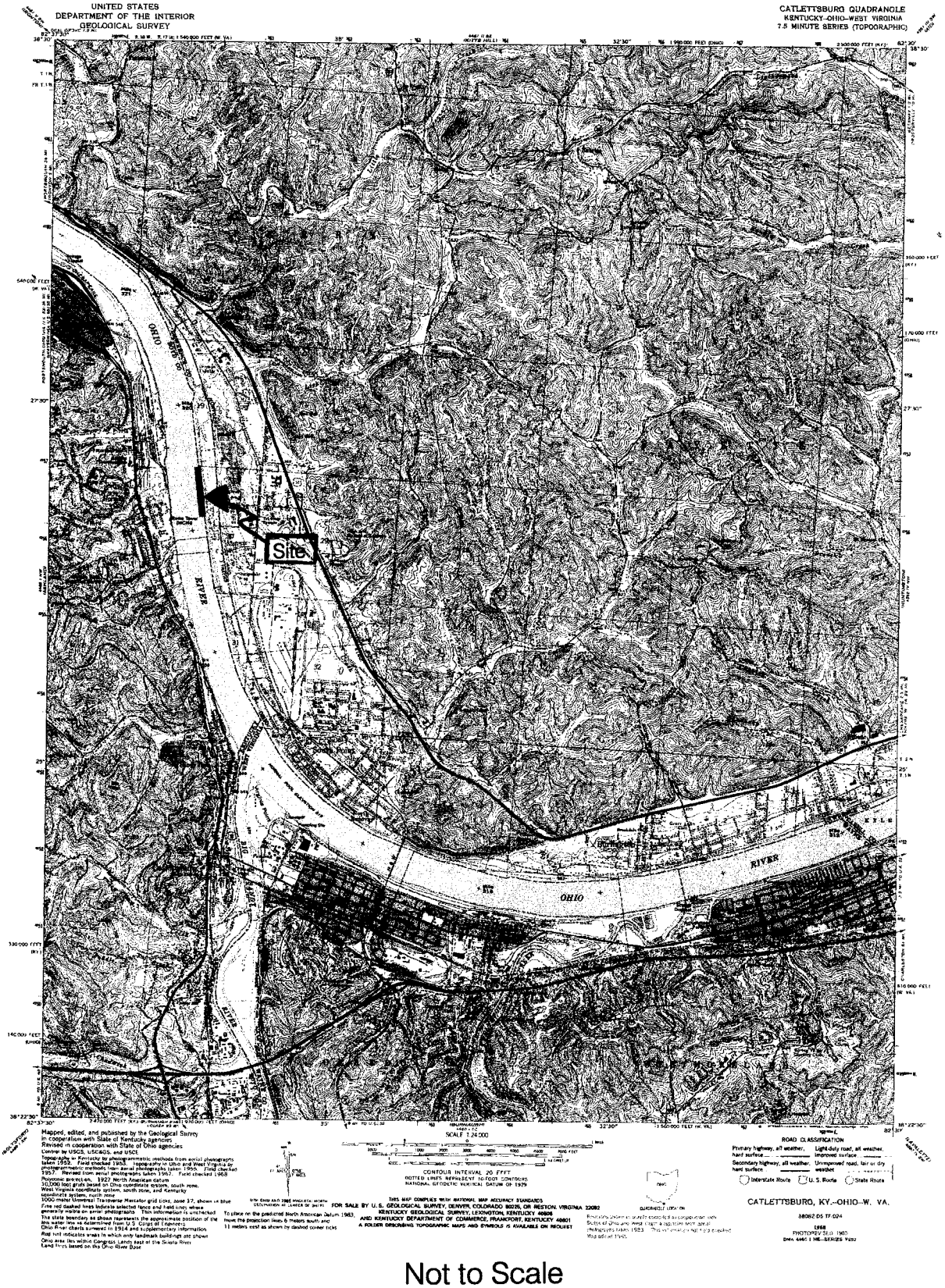

Not to Scale

Project No :	04-249
File Name :	Exhibit1.dwg
Issue Date :	January, 2005
REVISIONS	

Prepared by:
GeoSAM
Geographic Surveying and Mapping
J.L. Stephens, PS
J.L. Stephens & Associates, Inc.
1038 Sixth Avenue
Huntington, WV 25701
(304) 522-0811

Superior Marine Ways, Inc. - 200500186
Ohio River, rivermile 319.4 to 319.7
Lawrence County, Ohio
Location Map, Sheet 1 of 3

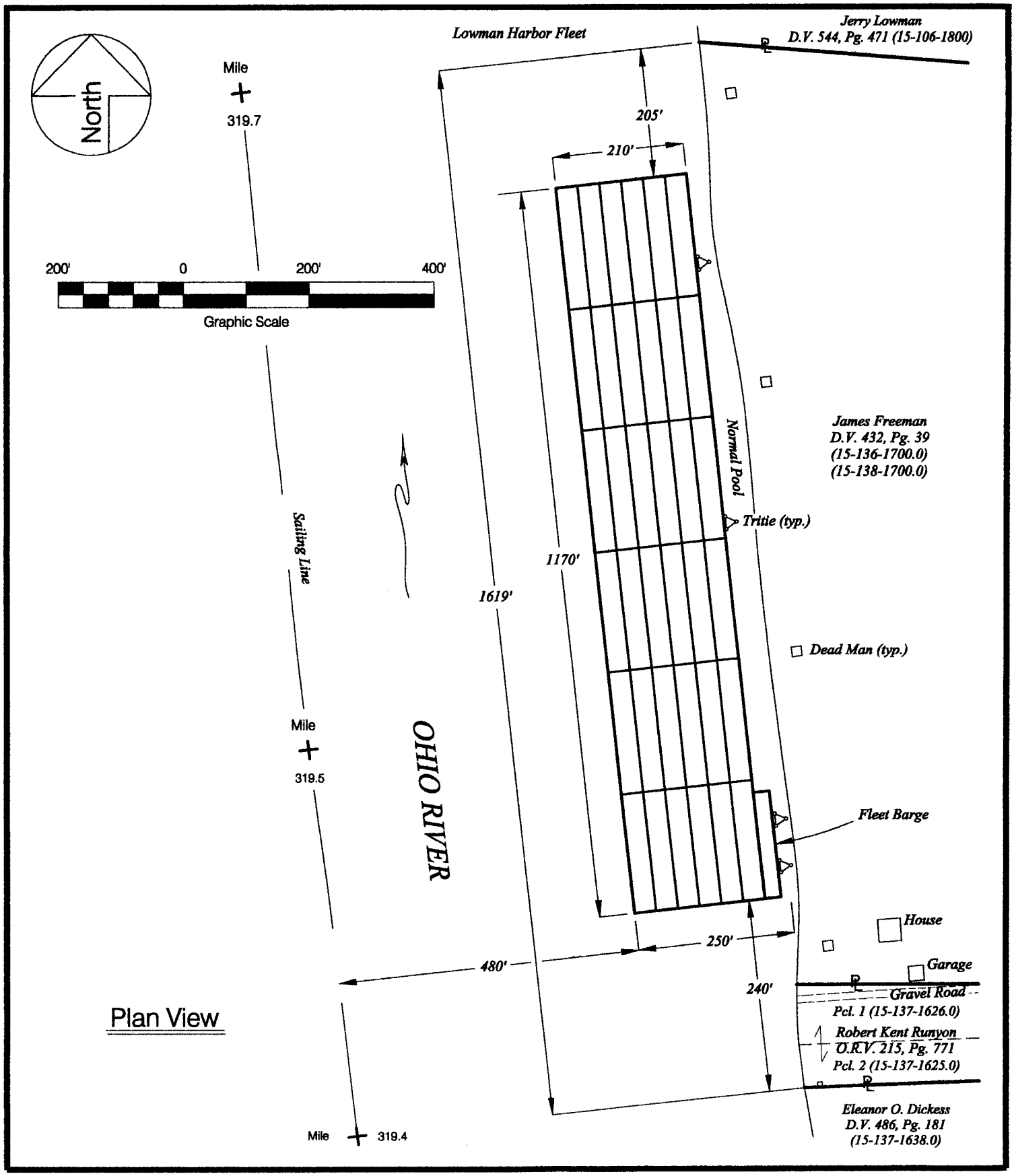

Plan View

Project No : 04-249
File Name : Exhibit1.dwg
Issue Date : January, 2005
REVISIONS

Prepared by:
GeoSAM
Geographic Surveying and Mapping
J.L. Stephens, PS
J.L. Stephens & Associates, Inc.
1038 Sixth Avenue
Huntington, WV 25701
(304) 522-0811

Superior Marine Ways, Inc. - 200500186
Ohio River, rivermile 319.4 to 319.7
Lawrence County, Ohio
Plan View, Sheet 2 of 3

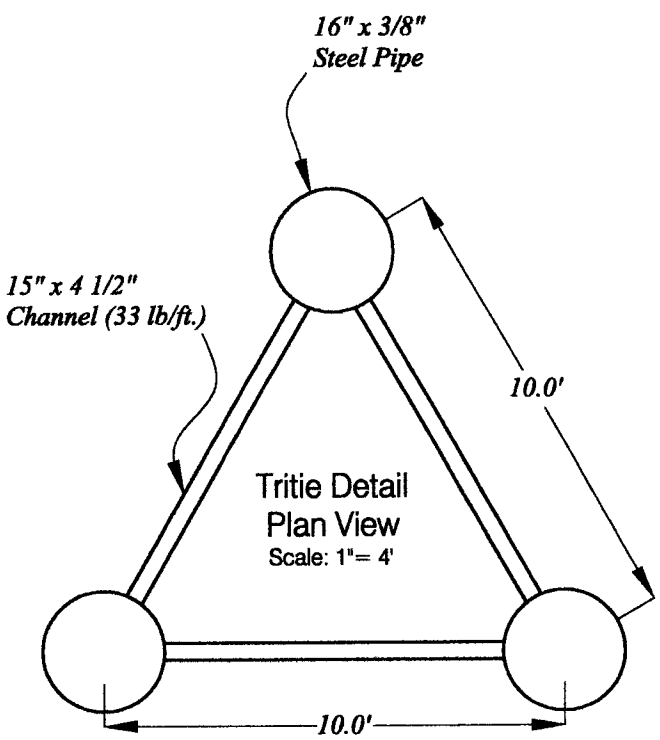

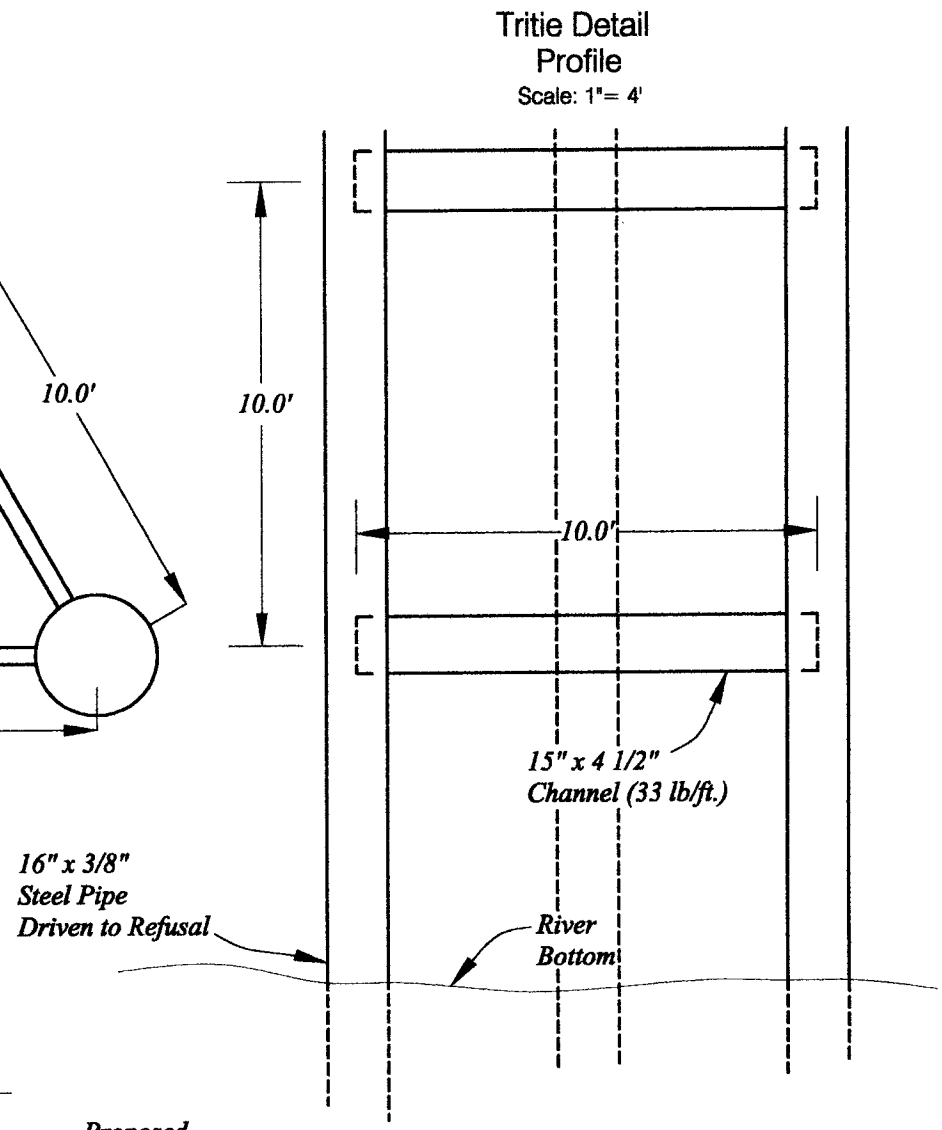

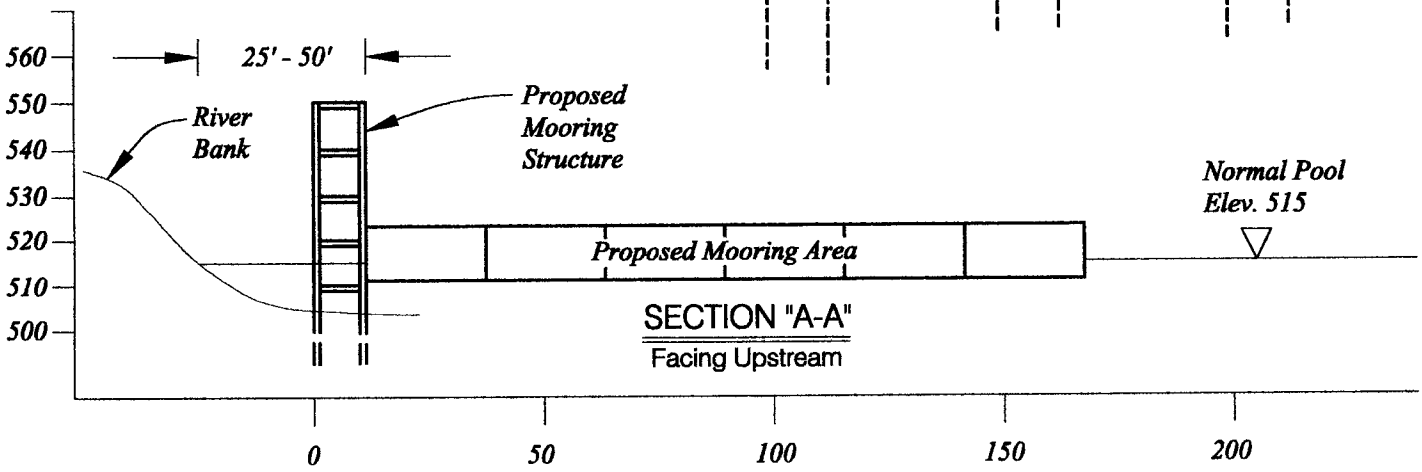

Project No : 04-249
File Name : exhibit1.dwg
Issue Date : Jan., 2005
REVISIONS

Prepared by:
GeoSAM SM
Geographic Surveying and Mapping
J.L. Stephens, PS
J.L. Stephens & Associates, Inc.
1038 Sixth Avenue
Huntington, WV 25701
(304) 522-0811

Superior Marine Ways, Inc. - 200500186
Ohio River, rivermile 319.4 to 319.7
Lawrence County, Ohio
Typical Cross Section, Sheet 3 of 3